ASAHI / AMERICA, Inc.®

Thermoplastic Valves and Piping Systems

35 GREEN STREET PO BOX 653 MALDEN, MA. 02148

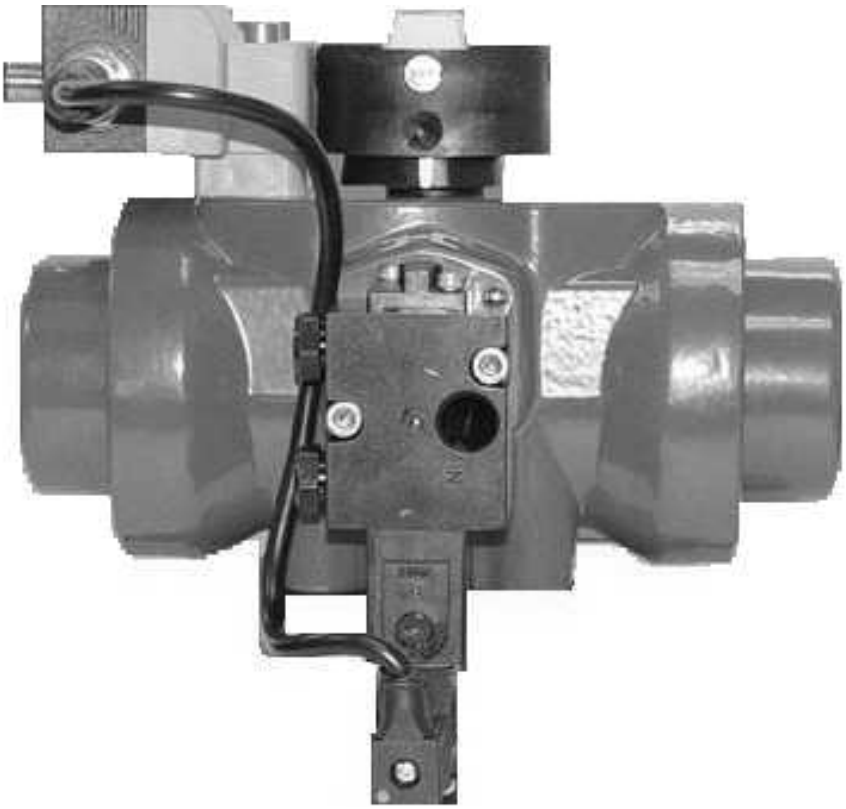

AS-Interface Installation Manual

Pneumatic Installation

AS-I Operation

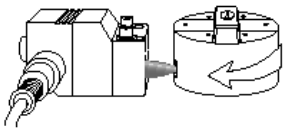

The top mounted sensor has two proximity switches located in a compact sealed housing. The target puck has two metallic screws located 90 ° apart at two different heights and is mounted on the actuator shaft. As the actuator cycles, the metallic screws align with the sensor and activate the proximity switch. When the valve is open, the top screw is directly in front of the sensor and an open valve status is shown. When the valve is closed, the bottom screw is directly in front of the sensor and a close status is shown.

AS-I Installation

Reference drawing # 0037MI

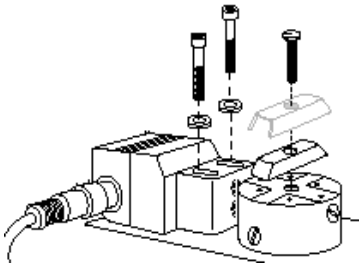

With the actuator #2 in the closed position, hold the puck #21 in front of you with the male "coupling" in line with the actuator shaft and the screw holes facing the back of the actuator (there will be no holes facing you). The bottom screw hole to the left is the closed target and requires the silver screw (the top uses a black screw). Rotate the puck 90 ºcounter-clockwise. The top screw hole to the left is the open target and requires the silver screw (the bottom uses the black screw). Align the puck #21 on the shaft so that the silver screw is on the bottom and to the left of the actuator ports. Lay the indicator strip #22 across the puck #21 to indicate the closed position and secure to the actuator shaft with the screw #23 provided.

Install the sensor #19 to the top of the actuator #2 with the supplied support plate #24, washers #25, and screws #20. Allow minimal clearance before tightening.

Install the solenoid #12 directly to the actuator #2 such that the coil is facing downward, and secure with the screws #11 provided. Connect the sensor #19 to the solenoid #12 using the supplied cable #16 and tighten; making sure that the gasket #17 is in place. Installation of components is complete.

AS-I Maintenance

The use of filtered lubricated air is recommended for above average cycle life of the solenoid and actuator (lubricant must be compatible with NBR and FKM). As with any device, periodic inspection is recommended for the solenoid, sensor, and actuator; although not required.

Sensor Specifications

Electrical Design Output Operating Voltage Current Consumption	2 inputs/2 outputs Transistor PNP 26.5…31.6 VDC <260 mA
INPUTS	
Input Circuit	DC PNP
Sensor Supply	AS-I
Voltage Range	20…30 VDC
Short-circuit Protection	—
OUTPUTS	
Electrically Separated	—
Short-circuit Protection	•
Integrated Watchdog	•
Max. Current Load per Output	100
Function/Display	
Operation LED	Green
Function LED	Red
Maximum Temperature	176ºF
Protection	IP67
Housing Material	Pocan; PC
Socket	M12 SS

Solenoid Specifications

Port Size	1/4 NPT
CV	0.75
Maximum Pressure	115 psi
Maximum Temperature	125ºF
Current Consumption	.75 watt
Coil	Epoxy Encapsulated
Protection	IP65
Body	Anodized Aluminum
Spool/Piston	Synthetic Resin
O-Rings	NBR + FKM

USER INFORMATION

SERIES 79P PNEUMATIC ACTUATOR

The Series 79P Pneumatic Actuator is a double-opposed piston, double rack and pinion, quarter turn operator.

Piston, piston guides, racks and pinion are molded from Nylon 66 resin for high impact resistance and durability.

Body and end caps are 316SS, polyester glass filled, or aluminum castings coated with Nylon 11 on inside and outside. This coating provides a smooth, low friction scratchproof surface, which is wear resistant and withstands corrosion. This style actuator has two opposed pistons with racks engaging with a single pinion on the actuator shaft. Racks and pinion engage with massive teeth over full length of pinion, resulting in balanced forces with minimal backlash.

Actuator shaft is Stainless Steel (Series 300) Sizes A, B, C, D and Phosphatized Steel Sizes E, F and G.

Actuator may be used with liquid as the power source as long as liquid is compatible with actuator internals, and contains no suspended particles.

Air Requirement

The condition and quality of the compressed air supply to an actuator will affect the efficiency and the life of the seals, bearings and actuator in general. We recommend installing a shutoff valve ahead of actuator to allow shutoff of air to allow removal of valve and actuator.
Clean, instrument quality dry air or gas is recommended for satisfactory operation. Lubricated air is acceptable, but is not necessary.

Caution: If air lubricators are used, the lubricant selected must be compatible with Nylon 66, Nylon 11 polyester glass filled, Nitrile (Buna-N) and Viton (FKM).

Factory assembled units are sized for operating air pressures of 80 PSI minimum to 120 PSI maximum. If lower air supply pressures are available, actuator/valve combination may need to be resized. Contact your Asahi/America representative for information.

The actuator environment temperature limits are -25°F and 195°F.

Installation of Ball Valve to Actuator

Position the valve and the actuator to corresponding positions (either OPEN or CLOSED). The flats on the actuator shaft extension and the indicator knob should indicate valve position.

A. Multi Port Ball Valves: (See Drawing #0124BV, sizes ½" - 2")

Install plate #8 to actuator #2 using screws #7 (1-1/2" and 2" only). Mount saddle #5 onto valve #1, (Saddle is an interference fit over neck of valve press down tight), then tighten setscrews #3 to secure in place. Insert coupling #6 onto stem of valve #1 and bolt actuator #2 onto assembly tightening bolts #4 evenly.

B. Multi Port Ball Valves: (See Drawing #0125BV, sizes 2-1/2" - 4")

Install plate #6 to actuator #2 using screws #8. Mount saddle #5 onto valve #1, (Saddle is an interference fit over neck of valve press down tight must also be solvent cemented to valve body), then tighten setscrews #3 to secure in place. Insert Coupling #6 onto stem of valve #1 and bolt actuator #2 onto assembly tightening bolts #4 evenly.

Note: Due to the torque required on sizes 3" and 4", we recommend that saddle #5 for PVC and CPVC be solvent cemented to valve as well as using set screws #3.

C. Type 21 Ball Valves (See Drawing #0121BV sizes 1/2" – 2")

Install mounting bracket #3 to actuator #2 using bolts #8 and washers #9. Insert coupling #4 on stem of valve #1 and then bolt valve #1 to mounting bracket #3 using bolts #5, nuts #6, and washers #7.

Note: All bolts should be snug and not excessively over tightened.

D. Type 21 Ball Valves (See Drawing #0123BV sizes 2-1/2" - 4")

Install mounting bracket #3 to actuator #2 using bolts #8 and washers #9. Insert coupling #4 on stem of valve #1 and then bolt valve #1 to mounting bracket #3 using bolts #5, nuts #6, and washers #7.

Note: All bolts should be snug and not excessively over tightened.

Installation of Butterfly Valve to Actuator

Position the valve and the actuator to corresponding positions (either OPEN or CLOSED). The flats on the actuator shaft extension and the indicator knob should indicate valve position.

Butterfly Valves (sizes 1-1/2" thru 6"): (See drawing # 0210BF)

All Type 56 butterfly valves as a standard feature conform to an ISO 5211/I-5211/II-DIN-3.337 specification standard. Butterfly valves sizes 1-1/2" thru 4" conform to an F07 bolt pattern. Butterfly valves sizes 5" thru 8" are classified as having an F10 bolt pattern. No specially machined stem or valve body drilling required. Remove handle (remove handle cap and hex head bolt) to expose throttle plate screws. Remove throttle plate and retaining washer to expose existing F07 or F10 bolt pattern.

CAUTION: If valve is in line, system must be shut down and have no line pressure before removing throttle plate and retaining washer.

Insert coupling #4 into actuator #2.
Mount bracket #3 to actuator #2 with bolts #8 and washers #9 and tighten evenly. Install valve #1 onto mounting bracket #3 and align stem of valve to engage with coupling #4. (Line scribed on top of stem indicates disc orientation) Install bolts #5, nuts #7 and washers #6 and tighten evenly. Flats on actuator shaft indicate valve position. (Disc Orientation)

CAUTION: If mounted unit is installed other than straight up, the actuator should be supported individually in order to prevent side loading and loosening up of fasteners.

Solenoid Operation

Actuated valves supplied with factory installed solenoid, the cycling is accomplished by energizing the coil for one valve position and de-energizing the solenoid coil for the opposite valve position. The unit is

electrically fail-safe. It will return to its de-energized position on electrical failure. This applies to air to air and air to spring models provided air supply is not interrupted.

> **Note:** On electrical failure unit can be manually cycled by one of the following:
>
> A. Depressing and rotating red slotted screw on solenoid block 90° providing air supply is not interrupted.
>
> B. Engaging wrench on flats of actuator shaft extension. This will be difficult on spring return models. On larger models where excessive torque is required to compress springs, a declutchable manual override is recommended.

Actuator Maintenance

Caution: Isolate actuator from electrical power supply and compressed air supply before any maintenance is performed. Make sure both sides of pistons have been bled off.

The Series 79P double rack and pinion actuators do not need any preventative maintenance.

Periodic checks could be performed to ensure proper tightness of all fasteners.

CAUTION — DANGER!!!!!!

Failure to use proper tools can result in SERIOUS INJURY!

The actuator springs are very strong and are compressed when actuator is assembled. A machine press (not a vise) and proper fixtures are required to disassemble actuator.

Sandwich end caps in a hydraulic press. Only open one end at a time. Remove end cap snap ring or bolts and gradually release hydraulic pressure until springs are fully relaxed.

Repair Kits

MODEL	PART#
A79P	2398001
B79PS	2398000
C79PS	2398010
D79PS	2398020
E79PS	2398030
F79PS	2398040
G79PS	2398050

Each kit includes
(See exploded view drawing)

1.	One set of Piston "O" rings	P/N 7
2.	One set of End Cap "O" rings	P/N 6
3.	Output shaft "O" rings	P/N 8 & 9
4.	Lock washer (shaft)	P/N 10
5.	Washer	P/N 11

NOTE: When ordering replacement actuator parts and/or options, specify model number and voltage.

Attachments:
8 drawings: 0037MI, 0124BV, 0125BV, 0131BV, 0121BV, 0123BV, 0210BF, 1233

ASAHI/AMERICA
35 Green Street
Malden, Ma. 02148

Phone: 800-343-3618
Fax: 800-426-7058

Internet: http://www.asahi-america.com

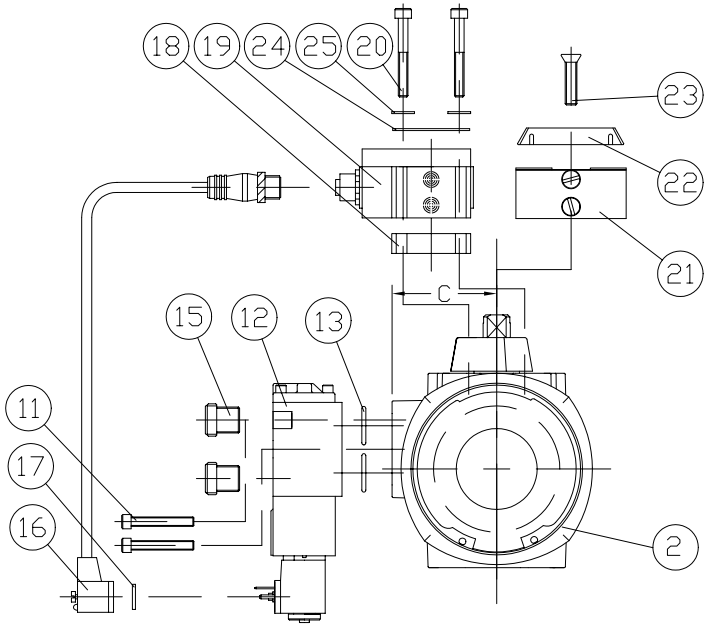

FOR REFERENCE ONLY
ASAHI/AMERICA

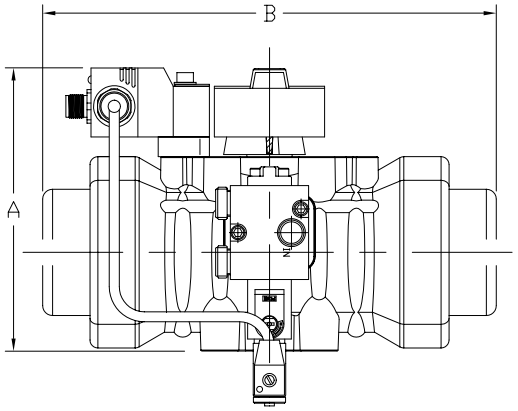

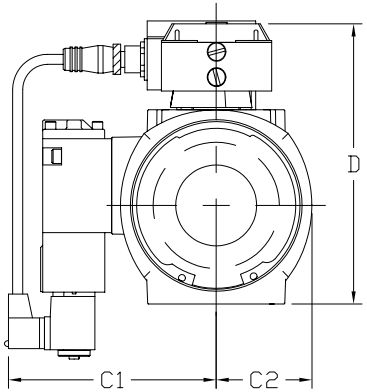

ITEM	DESCRIPTION	MATERIAL	QTY
25	FLAT WASHER (M5)	316SS	2
24	SUPPORT PLATE	316SS	1
23	FLAT HEAD SCREW (M6X1-20LG)	316SS	1
22	POSITION INDICATOR	ABS	1
21	PUCK	DELRIN	1
20	ALLEN BOLT (M5X2-40LG)	316SS	2
19	MODULE	PBTP	1
18	SPACER	PBTP	1
17	GASKET	NBR	1
16	PATCH CABLE	PUR-PVC	1
15	MUFFLER	ANODIZED ALUMINUM	2
13	O-RING	NBR	2
12	SOLENOID (VERSA: SERIES C5 NAMUR)	ANODIZED ALUMINUM	1
11	SCREW SOC HD (M5X2-30LG)	STAINLESS STEEL	2
2	ACTUATOR SERIES 79	☐ GLASS FILLED POLYAMIDE ☐ STAINLESS STEEL (OPTION) ☐ RILSAN COATED CAST ALUMINUM (OPTION)	1

UNIT: INCH

MODEL A-A	MODEL A-S	A		B		C		C1		C2		D	
		A-A	A-S	A-A	A-S	A-A	A-S	A-A	A-S	A-A	A-S	A-A	A-S
AP79PN	AP79PSN	4.78	4.78	4.22	5.55	1.47	1.47	3.52	3.52	1.21	1.21	3.91	3.91
BP79PN	BP79PSN	5.38	5.38	4.92	5.86	1.73	1.73	3.78	3.78	1.41	1.41	5.32	5.32
CP79PN	CP79PSN	5.62	5.62	7.00	8.74	1.97	1.97	4.22	4.22	1.85	1.85	5.56	5.56
DP79PN	DP79PSN	6.96	6.96	9.21	11.49	2.56	2.56	4.69	4.69	2.36	2.36	6.90	6.90
E79PN	E79PSN	8.89	8.89	12.12	18.50	2.55	2.55	5.59	5.59	3.23	3.23	8.83	8.83

NOTE. The shape and appearance of assembly differ a little with nominal size compared to this drawing.

	NAME	DATE
DR	KENICHI MIYAZAKI	4/8/03
APPD	KENNEY BLYSTONE	4/8/03
PROD	LEO LESTER	4/8/03
WO#/SO#		
FILE		

ASAHI/AMERICA
ISO 9001 CERTIFIED
35 GREEN STREET, P.O. BOX 653, MALDEN, MA.

PNEUMATIC ACTUATOR SERIES79 ASI BUS SYSTEM

SIZE	DWG. NO.	REV
A	0037MI	B

SCALE NTS

SHEET 1 OF 1

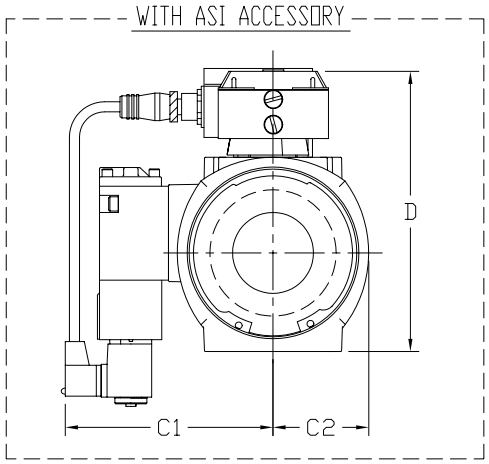

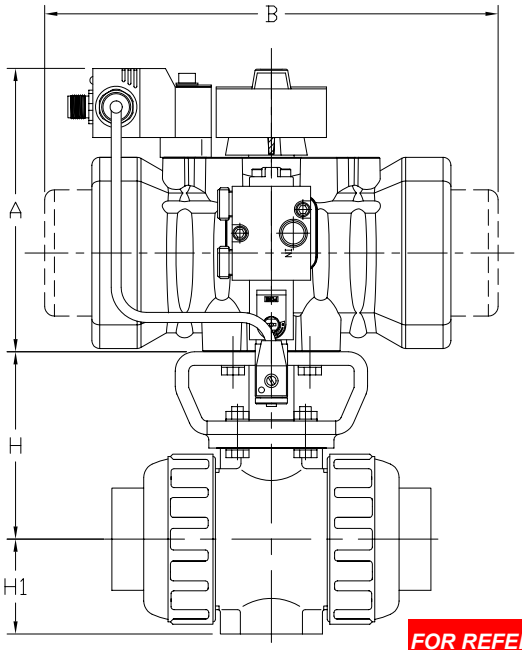

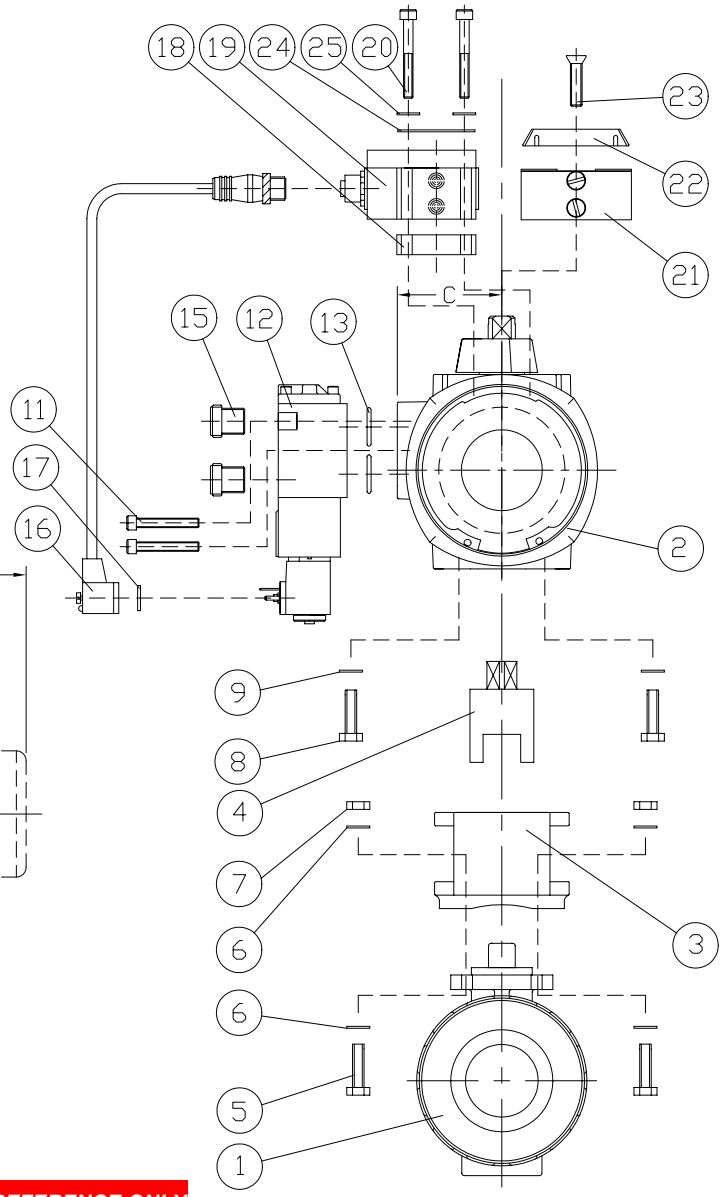

UNIT: INCH

VALVE SIZE	1/2″	3/4″	1″	1-1/4″	1-1/2″	2″
H	2.76	3.01	3.29	3.64	3.98	4.43
H1	1.14	1.38	1.54	1.85	2.17	2.60

NOTE: FOR DETAILED VALVE DIMENSIONS, REFER TO DWG. NO. 0045BV

ITEM	DESCRIPTION	MATERIAL	QTY
25	FLAT WASHER (M5)	316SS	2
24	SUPPORT PLATE	316SS	1
23	FLAT HEAD SCREW (M6X1-20LG)	316SS	1
22	POSITION INDICATOR	ABS	1
21	PUCK	DELRIN	1
20	ALLEN BOLT (M5X2-40LG)	316SS	2
19	MODULE	PBTP	1
18	SPACER	PBTP	1
17	GASKET	NBR	1
16	PATCH CABLE	PUR-PVC	1
15	MUFFLER	ANODIZED ALUMINUM	2
13	O-RING	NBR	2
12	SOLENOID (VERSA: SERIES C5 NAMUR)	ANODIZED ALUMINUM	1
11	SCREW SOC HD (M5X2-30LG)	STAINLESS STEEL	2
9	FLAT WASHER (M6.0)	STAINLESS STEEL	4
8	BOLT (FOR A79 (PW) USE M5.0x.8-16LG) (FOR B79 (PO) USE M6.0x1-16LG) (FOR C79 (P1) USE M8.0x1.25-16LG)	STAINLESS STEEL	4
7	NUT (FOR 1/2″ THRU 1-1/4″ : M5.0x.8) (FOR 1/2″ THRU 1-1/4″ : M6.0x1)	STAINLESS STEEL	4
6	FLAT WASHER (FOR 1/2″ THRU 1-1/4″ : M5.0) (FOR 1/2″ THRU 1-1/4″ : M6.0)	STAINLESS STEEL	8
5	BOLT (FOR 1/2″ THRU 1-1/4″ : M5.0x.8-16LG) (FOR 1/2″ THRU 1-1/4″ : M6.0x1-20LG)	STAINLESS STEEL	4
4	COUPLING	303SS	1
3	MOUNTING BRACKET	PPG	1
2	ACTUATOR SERIES 79	☐ GLASS FILLED POLYAMIDE ☐ STAINLESS STEEL (OPTION) ☐ RILSAN COATED CAST ALUMINUM (OPTION)	1
1	BALL VALVE TYPE 21	PVC,CPVC,PP,PVDF	1

FOR REFERENCE ONLY
ASAHI/AMERICA

UNIT: INCH

VALVE SIZE	MODEL A-A	MODEL A-S	A		B		C		C1		C2		D	
			A-A	A-S	A-A	A-S	A-A	A-S	A-A	A-S	A-A	A-S	A-A	A-S
1/2″	AP79PN	AP79PSN	4.78	4.78	4.22	5.55	1.47	1.47	3.52	3.52	1.21	1.21	3.91	3.91
3/4″	AP79PN	AP79PSN	4.78	4.78	4.22	5.55	1.47	1.47	3.52	3.52	1.21	1.21	3.91	3.91
1″	AP79PN	AP79PSN	4.78	4.78	4.22	5.55	1.47	1.47	3.52	3.52	1.21	1.21	3.91	3.91
1-1/4″	AP79PN	AP79PSN	4.78	4.78	4.22	5.55	1.47	1.47	3.52	3.52	1.21	1.21	3.91	3.91
1-1/2″	AP79PN	BP79PSN	4.78	5.38	4.22	5.86	1.47	1.73	3.52	3.78	1.21	1.41	3.91	5.32
2″	AP79PN	CP79PSN	4.78	5.62	4.22	7.64	1.47	1.97	3.52	4.22	1.21	1.85	3.91	5.56

NOTE. The shape and appearance of assembly differ a little with nominal size compared to this drawing.

	NAME	DATE
DR	KENICHI MIYAZAKI	4/8/03
APPD	KENNY BLYSTONE	4/8/03
PROD	LEO LESTER	4/8/03
WO#/CO#		
FILE		

ASAHI/AMERICA
ISO 9001 CERTIFIED
35 GREEN STREET, P.O. BOX 653, MALDEN, MA.

BALL VALVE TYPE21 SERIES79/ASI BUS SYSTEM 1/2″ THRU 2″

SIZE	DWG. NO.	REV
A	0121BV	E

SCALE NTS

SHEET 1 OF 1

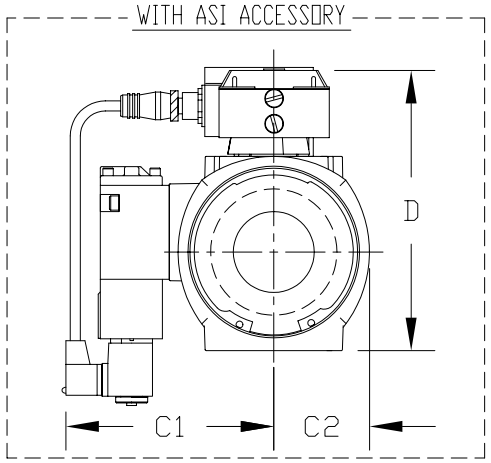

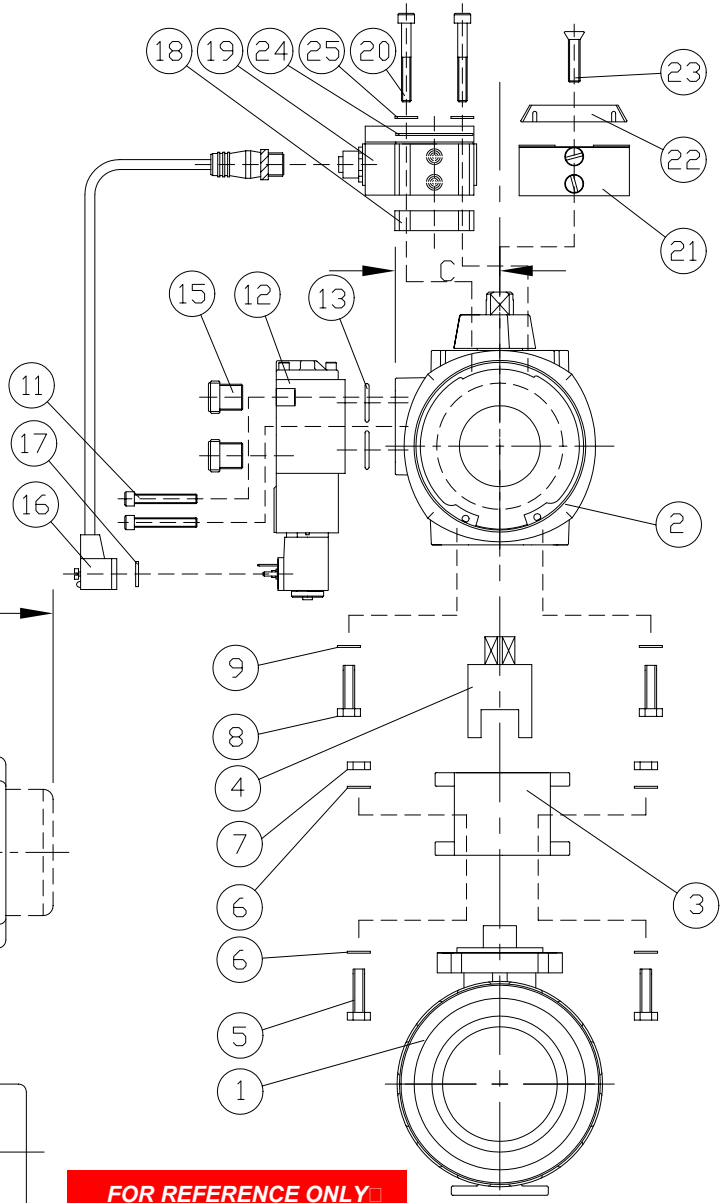

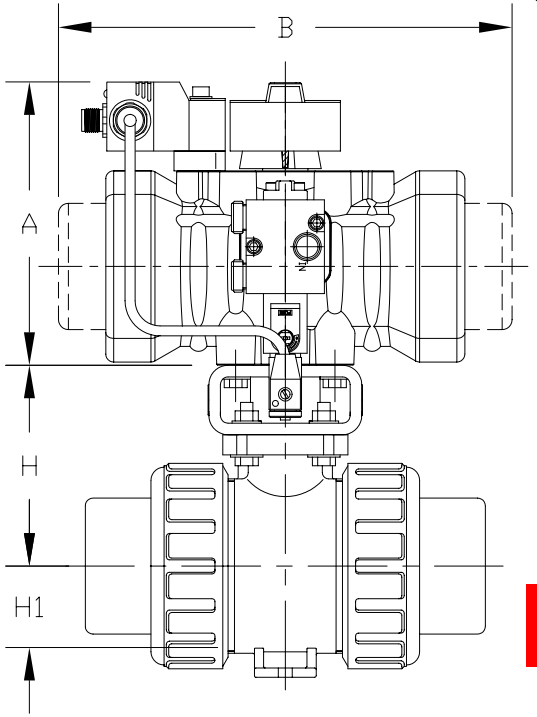

UNIT: INCH

VALVE SIZE	2-1/2″	3″	4″
H	5.12	5.47	6.97
H1	2.83	3.35	4.33

NOTE: FOR DETAILED VALVE DIMENSIONS, REFER TO DWG. NO. 0099BV

ITEM	DESCRIPTION	MATERIAL	QTY
25	FLAT WASHER (M5)	316SS	2
24	SUPPORT PLATE	316SS	1
23	FLAT HEAD SCREW (M6X1-20LG)	316SS	1
22	POSITION INDICATOR	ABS	1
21	PUCK	DELRIN	1
20	ALLEN BOLT (M5X2-40LG)	316SS	2
19	MODULE	PBTP	1
18	SPACER	PBTP	1
17	GASKET	NBR	1
16	PATCH CABLE	PUR-PVC	1
15	MUFFLER	ANODIZED ALUMINUM	2
13	O-RING	NBR	2
12	SOLENOID (VERSA: SERIES C5 NAMUR)	ANODIZED ALUMINUM	1
11	SCREW SOC HD (M5X2-30LG)	STAINLESS STEEL	2
9	FLAT WASHER (M6.0)	STAINLESS STEEL	4
8	BOLT (FOR A79 (PW) USE M5.0x.8-16LG) (FOR B79 (PO) USE M6.0x1-16LG) (FOR C79 (P1) USE M8.0x1.25-16LG)	STAINLESS STEEL	4
7	NUT (FOR 2-1/2″ AND 3″ : M8.0x1.25) (FOR 4″ : M10.0x1.50)	STAINLESS STEEL	4
6	FLAT WASHER (FOR 2-1/2″ AND 3″ : M8.0) (FOR 4″ : M10.0)	STAINLESS STEEL	8
5	BOLT (FOR 2-1/2″ AND 3″ : M8.0x1.25-35LG) (FOR 4″ : M10.0x1.50-40LG)	STAINLESS STEEL	4
4	COUPLING	303SS	1
3	MOUNTING BRACKET	PPG	1
2	ACTUATOR SERIES 79	□ GLASS FILLED POLYAMIDE □ STAINLESS STEEL (OPTION) □ RILSAN COATED CAST ALUMINUM (OPTION)	1
1	BALL VALVE TYPE 21	PVC,CPVC,PP,PVDF	1

FOR REFERENCE ONLY□
ASAHI/AMERICA

UNIT: INCH

VALVE SIZE	MODEL A-A	MODEL A-S	A		B		C		C1		C2		D	
			A-A	A-S	A-A	A-S	A-A	A-S	A-A	A-S	A-A	A-S	A-A	A-S
2-1/2″	CP79PN	CP79PSN	5.62	5.62	7.00	8.74	1.97	1.97	4.22	4.22	1.85	1.85	5.56	5.56
3″	CP79PN	DP79PSN	5.62	6.96	7.00	11.49	1.97	2.56	4.22	4.69	1.85	2.36	5.56	6.90
4″	DP79PN	DP79PSN	6.96	6.96	9.21	11.49	2.56	2.56	4.69	4.69	2.36	2.36	6.90	6.90

NOTE. The shape and appearance of assembly differ a little with nominal size compared to this drawing.

	NAME	DATE
DR	KENICHI MIYAZAKI	4/8/03
APPD	KENNY BLYSTONE	4/8/03
PROD	LEO LESTER	4/8/03
WO#/CO#		
FILE		

ASAHI/AMERICA
ISO 9001 CERTIFIED
35 GREEN STREET, P.O. BOX 653, MALDEN, MA.

BALL VALVE TYPE21 SERIES79/ASI BUS SYSTEM 2-1/2″ THRU 4″

SIZE	DWG. NO.	REV
A	0123BV	E

SCALE NTS

SHEET 1 OF 1

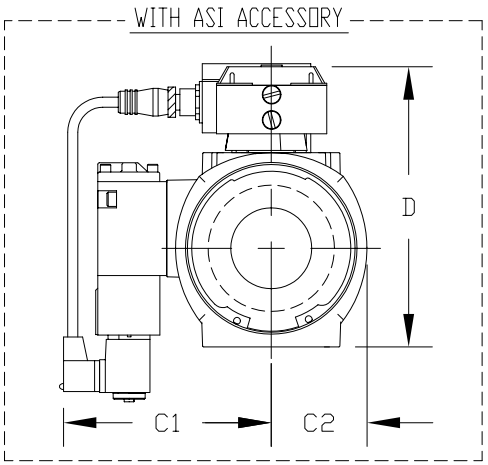

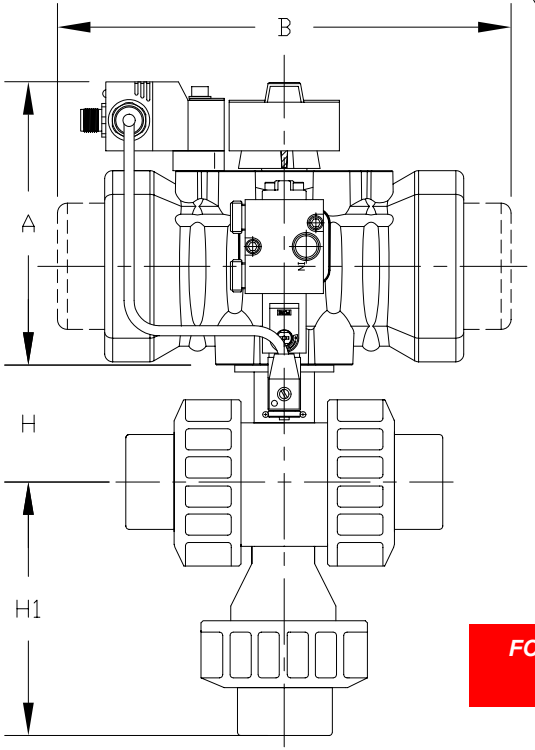

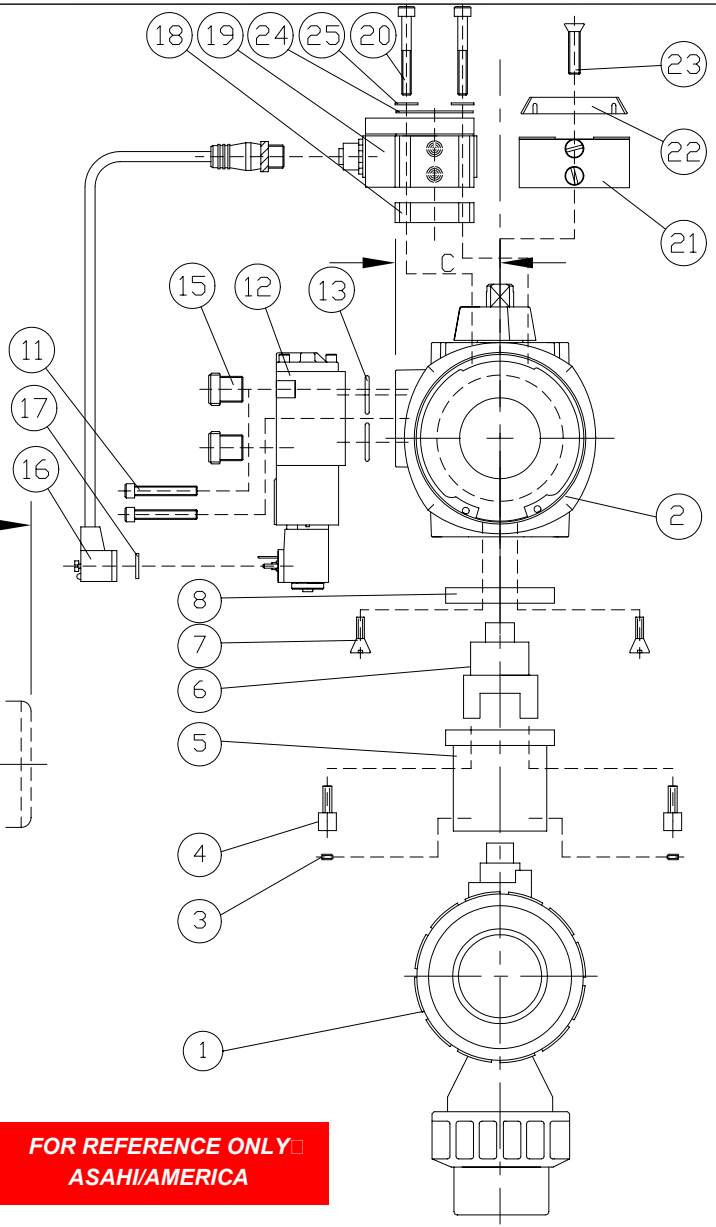

FOR REFERENCE ONLY
ASAHI/AMERICA

UNIT: INCH

VALVE SIZE	1/2″	3/4″	1″	1-1/4″	1-1/2″	2″
H	1.95	2.31	2.46	2.92	3.85	4.00
H1	3.33	3.88	4.81	6.61	6.61	7.57

NOTE: FOR DETAILED VALVE DIMENSIONS, REFER TO DWG. NO. 0060BV, 0101BV, 0102BV
L-PORT : DWG. NO. 0060BV
DOUBLE L-PORT : DWG. NO. 0101BV
CROSS-PORT : DWG. NO. 0102BV

ITEM	DESCRIPTION	MATERIAL	QTY
25	FLAT WASHER (M5)	316SS	2
24	SUPPORT PLATE	316SS	1
23	FLAT HEAD SCREW (M6X1-20LG)	316SS	1
22	POSITION INDICATOR	ABS	1
21	PUCK	DELRIN	1
20	ALLEN BOLT (M5X2-40LG)	316SS	2
19	MODULE	PBTP	1
18	SPACER	PBTP	1
17	GASKET	NBR	1
16	PATCH CABLE	PUR-PVC	1
15	MUFFLER	ANODIZED ALUMINUM	2
13	O-RING	NBR	2
12	SOLENOID (VERSA: SERIES C5 NAMUR)	ANODIZED ALUMINUM	1
11	SCREW SOC HD (M5X2-30LG)	STAINLESS STEEL	2
8	PLATE MOUNTING (FOR 1-1/2″ AND 2″ ONLY)	ANODIZED ALUMINUM	1
7	SCREW FLAT HD (FOR 1-1/2″ AND 2″ ONLY)	STAINLESS STEEL	4
6	COUPLING	ANODIZED ALUMINUM	1
5	SADDLE	ANODIZED ALUMINUM	1
4	SCREW SOC HD (FOR 1/2″ THRU 1-1/4″ : M6.0x16) (FOR 1/2″ THRU 1-1/4″ : M8.0x12)	STAINLESS STEEL	4
3	SET SCREW (10-32x1/4″)	STAINLESS STEEL	2
2	ACTUATOR SERIES 79	□ GLASS FILLED POLYAMIDE □ STAINLESS STEEL (OPTION) □ RILSAN COATED CAST ALUMINUM (OPTION)	1
1	MULTI PORT BALL VALVE	PVC,CPVC,PP,PVDF	1

UNIT: INCH

VALVE SIZE	MODEL A-A	MODEL A-S	A		B		C		C1		C2		D	
			A-A	A-S	A-A	A-S	A-A	A-S	A-A	A-S	A-A	A-S	A-A	A-S
1/2″	AP79PN	AP79PSN	4.78	4.78	4.22	5.55	1.47	1.47	3.52	3.52	1.21	1.21	3.91	3.91
3/4″	AP79PN	AP79PSN	4.78	4.78	4.22	5.55	1.47	1.47	3.52	3.52	1.21	1.21	3.91	3.91
1″	AP79PN	AP79PSN	4.78	4.78	4.22	5.55	1.47	1.47	3.52	3.52	1.21	1.21	3.91	3.91
1-1/4″	AP79PN	AP79PSN	4.78	4.78	4.22	5.55	1.47	1.47	3.52	3.52	1.21	1.21	3.91	3.91
1-1/2″	AP79PN	BP79PSN	4.78	5.38	4.22	5.86	1.47	1.73	3.52	3.78	1.21	1.41	3.91	5.32
2″	AP79PN	CP79PSN	4.78	5.62	4.22	7.64	1.47	1.97	3.52	4.22	1.21	1.85	3.91	5.56

NOTE. The shape and appearance of assembly differ a little with nominal size compared to this drawing.

	NAME	DATE
DR	KENICHI MIYAZAKI	4/8/03
APPD	KENNEY BLYSTONE	4/8/03
PROD	LEO LESTER	4/8/03
WO#/CO#		
FILE		

ASAHI/AMERICA
ISO 9001 CERTIFIED
35 GREEN STREET, P.O. BOX 653, MALDEN, MA.

MULTI PORT BALL VALVE SERIES79/ASI BUS SYSTEM 1/2″ THRU 2″

SIZE	DWG. NO.	REV
A	0124BV	E

SCALE NTS

SHEET 1 OF 1

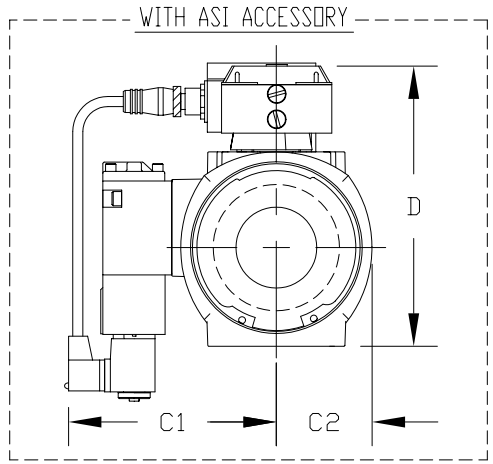

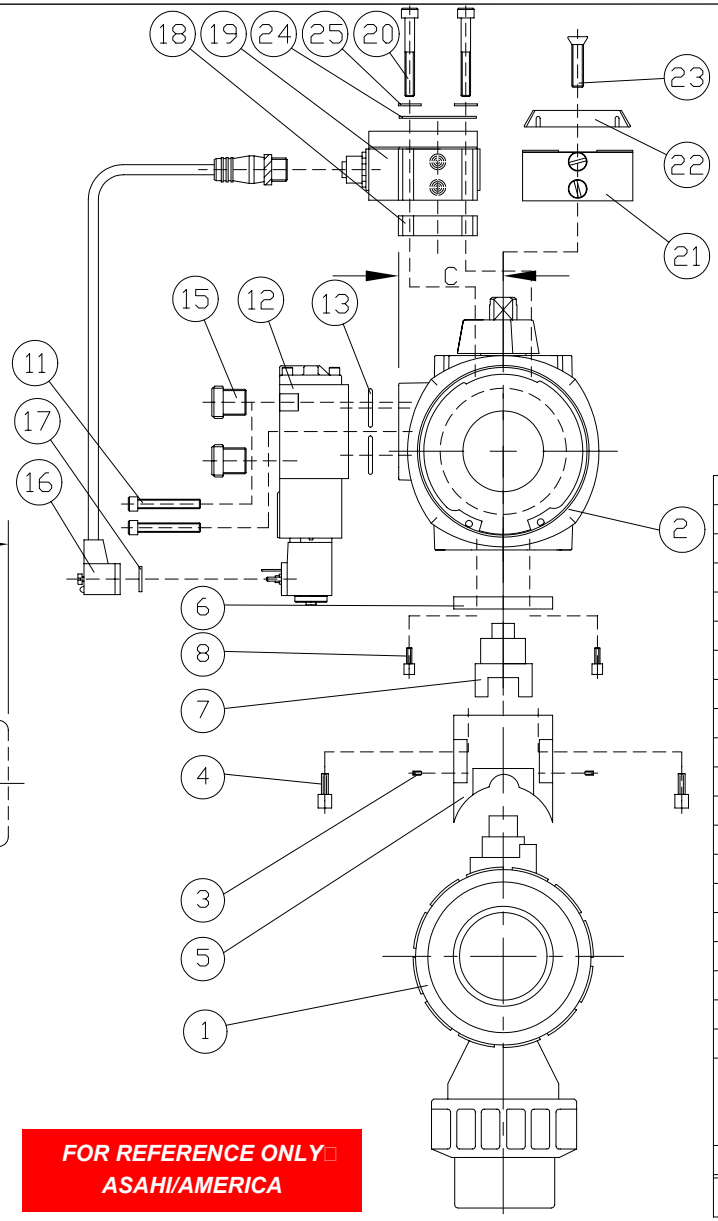

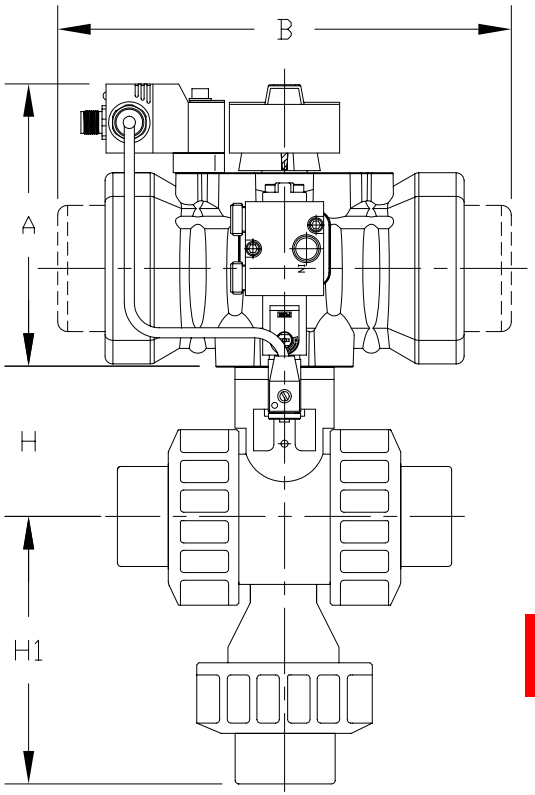

UNIT: INCH

VALVE SIZE	2-1/2″	3″	4″
H	5.12	5.50	6.88
H1	10.34	10.34	12.24

NOTE: FOR DETAILED VALVE DIMENSIONS, REFER TO DWG. NO. 0060BV, 0101BV, 0102BV
L-PORT : DWG. NO. 0060BV
DOUBLE L-PORT : DWG. NO. 0101BV
CROSS-PORT : DWG. NO. 0102BV

ITEM	DESCRIPTION	MATERIAL	QTY
25	FLAT WASHER (M5)	316SS	2
24	SUPPORT PLATE	316SS	1
23	FLAT HEAD SCREW (M6X1-20LG)	316SS	1
22	POSITION INDICATOR	ABS	1
21	PUCK	DELRIN	1
20	ALLEN BOLT (M5X2-40LG)	316SS	2
19	MODULE	PBTP	1
18	SPACER	PBTP	1
17	GASKET	NBR	1
16	PATCH CABLE	PUR-PVC	1
15	MUFFLER	ANODIZED ALUMINUM	2
13	O-RING	NBR	2
12	SOLENOID (VERSA: SERIES C5 NAMUR)	ANODIZED ALUMINUM	1
11	SCREW SOC HD (M5X2-30LG)	STAINLESS STEEL	2
8	SCREW SOC HD (M6.0x16)	STAINLESS STEEL	4
7	COUPLING	ANODIZED ALUM.	1
6	PLATE MOUNTING	ANODIZED ALUM.	1
5	SADDLE	PVC	1
4	SCREW SOC HD (1/4-20x11/4)	STAINLESS STEEL	4
3	SET SCREW (1/4-20x3/4)	STAINLESS STEEL	4
2	ACTUATOR SERIES 79	□ GLASS FILLED POLYAMIDE □ STAINLESS STEEL (OPTION) □ RILSAN COATED CAST ALUMINUM (OPTION)	1
1	MULTI PORT BALL VALVE	PVC,CPVC,PP,PVDF	1

FOR REFERENCE ONLY
ASAHI/AMERICA

UNIT: INCH

VALVE SIZE	MODEL A-A	MODEL A-S	A		B		C		C1		C2		D	
			A-A	A-S	A-A	A-S	A-A	A-S	A-A	A-S	A-A	A-S	A-A	A-S
2-1/2″	CP79PN	CP79PSN	5.62	5.62	7.00	8.74	1.97	1.97	4.22	4.22	1.85	1.85	5.56	5.56
3″	CP79PN	DP79PSN	5.62	6.96	7.00	11.49	1.97	2.56	4.22	4.69	1.85	2.36	5.56	6.90
4″	DP79PN	DP79PSN	6.96	6.96	9.21	11.49	2.56	2.56	4.69	4.69	2.36	2.36	6.90	6.90

NOTE. The shape and appearance of assembly differ a little with nominal size compared to this drawing.

	NAME	DATE
DR	KENICHI MIYAZAKI	4/8/03
APPD	KENNY BLYSTONE	4/8/03
PROD	LEO LESTER	4/8/03
WO#/CO#		
FILE		

ASAHI/AMERICA
ISO 9001 CERTIFIED
35 GREEN STREET, P.O. BOX 653, MALDEN, MA.

MULTI PORT BALL VALVE SERIES79/ASI BUS SYSTEM 2-1/2″ THRU 4″

SIZE	DWG. NO.	REV
A	0125BV	E

SCALE NTS

SHEET 1 OF 1

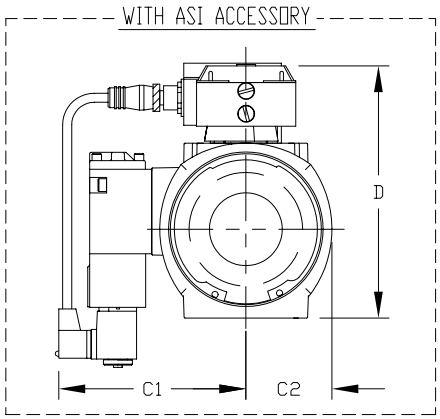

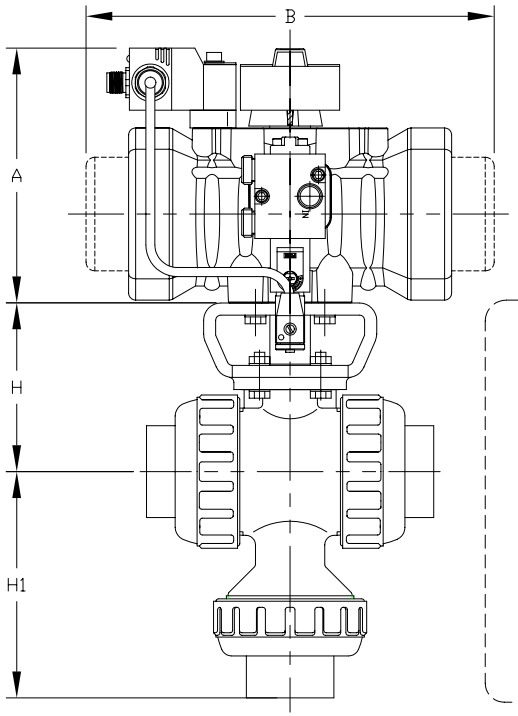

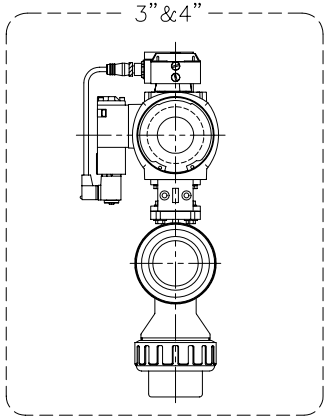

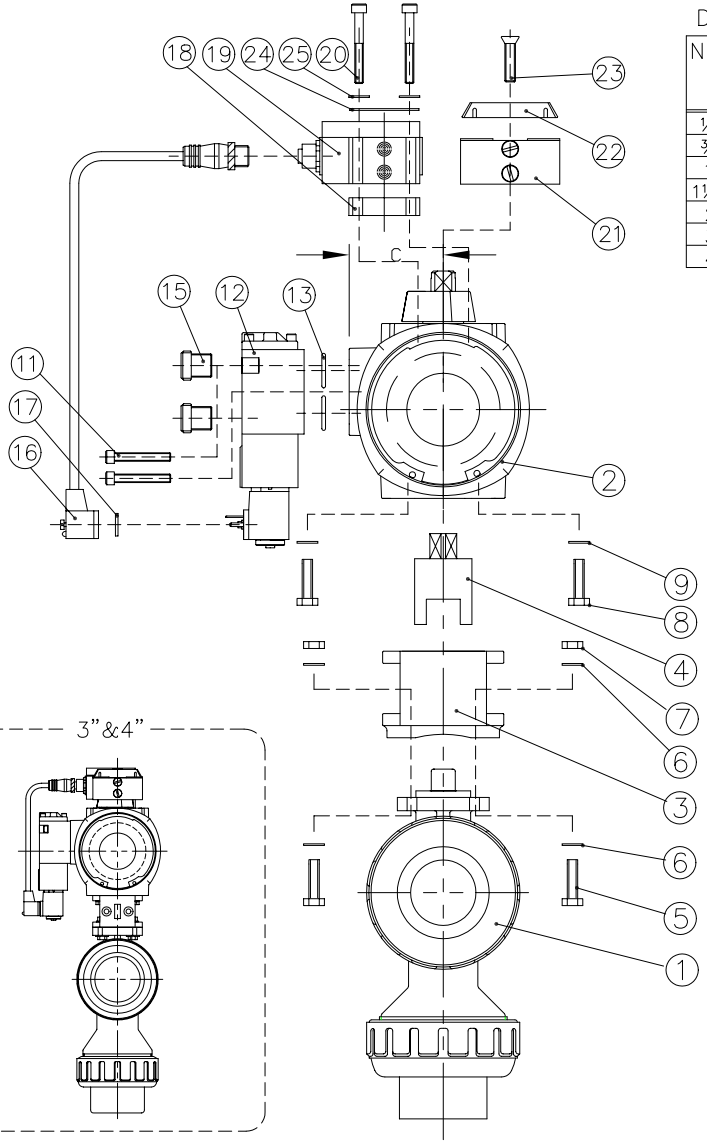

DIMENSIONS TABLE

UNIT: inch

NOMINAL SIZE		H	FLANGED H1	FLANGED L	THREADED H1	THREADED L	SOCKET PVC,CPVC H1	SOCKET PVC,CPVC L	SOCKET PP,PVDF (DIN) H1	SOCKET PP,PVDF (DIN) L	SOCKET PP,PVDF (IPS) H1	SOCKET PP,PVDF (IPS) L	SPIGOT (BUTT END) H1	SPIGOT (BUTT END) L
½"	15mm	2.76	3.70	5.63	2.89	4.02	3.08	4.45	2.80	3.90	3.09	4.45	3.27	4.88
¾	20	3.01	4.50	6.77	3.48	4.72	3.56	5.08	3.27	4.49	3.61	5.08	3.90	5.67
1	25	3.29	5.24	7.36	4.13	5.16	4.32	5.75	3.94	4.84	4.37	5.75	4.53	6.06
1½	40	3.98	6.50	8.35	5.53	6.42	5.71	7.24	5.16	5.83	5.85	7.24	6.02	6.85
2	50	4.43	7.34	9.21	6.61	7.76	6.66	8.23	6.06	6.93	6.76	8.23	7.01	8.82
3	80	5.47	10.06	11.97	9.25	10.39	9.59	11.10	8.82	9.88	11.10	11.10	9.69	11.61
4	100	6.97	12.01	14.65	11.77	14.17	11.58	13.90	10.98	12.20	14.37	14.37	11.85	12.72

ITEM	DESCRIPTION	MATERIAL	QTY
25	FLAT WASHER (M5)	316SS	2
24	SUPPORT PLATE	316SS	1
23	FLAT HEAD SCREW (M6X1-20LG)	316SS	1
22	POSITION INDICATOR	ABS	1
21	PUCK	DELRIN	1
20	ALLEN BOLT (M5X2-40LG)	316SS	2
19	MODULE	PBTP	1
18	SPACER	PBTP	1
17	GASKET	NBR	1
16	PATCH CABLE	PUR-PVC	1
15	MUFFLER	ANODIZED ALUMINUM	2
13	O-RING	NBR	2
12	SOLENOID (VERSA: SERIES C5 NAMUR)	ANODIZED ALUMINUM	1
11	SCREW SOC HD (M5X2-30LG)	STAINLESS STEEL	2
9	FLAT WASHER (M6.0)	STAINLESS STEEL	4
8	BOLT (FOR A79 (PW) USE M5.0x.8-16LG) (FOR B79 (PO) USE M6.0x1-16LG) (FOR C79 (P1) USE M8.0x1.25-16LG)	STAINLESS STEEL	4
7	NUT (FOR 1/2" THRU 1-1/4" : M5.0x.8) (FOR 1-1/2" THRU 2" : M6.0x1) (FOR 3" : M8.0x1.25) (FOR 4" : M10.0x1.50)	STAINLESS STEEL	4
6	FLAT WASHER (FOR 1/2" THRU 1-1/4" : M5.0) (FOR 1-1/2" THRU 2" : M6.0) (FOR 3" : M8.0) (FOR 4" : M10.0)	STAINLESS STEEL	8
5	BOLT (FOR 1/2" THRU 1" : M5.0x.8-16LG) (FOR 1-1/2" THRU 2" : M6.0x1-20LG) (FOR 3" : M8.0x1.25-35LG) (FOR 4" : M10.0x1.50-40LG)	STAINLESS STEEL	4
4	COUPLING	STAINLESS STEEL 303	1
3	MOUNTING BRACKET	PPG	1
2	ACTUATOR SERIES 79	☐ GLASS FILLED POLYAMIDE ☐ STAINLESS STEEL (OPTION) ☐ RILSAN COATED CAST ALUMINUM (OPTION)	1
1	MULTIPORT BALL VALVE TYPE23	PVC,CPVC,PP,PVDF	1

DIMENSIONS TABLE

UNIT: inch

VALVE SIZE	MODEL A-A	MODEL A-S	A A-A	A A-S	B A-A	B A-S	C A-A	C A-S	C1 A-A	C1 A-S	C2 A-A	C2 A-S	D A-A	D A-S
1/2"	AP79PN	AP79PSN	3.34	3.34	4.22	5.55	1.47	1.47	5.41	5.41	1.21	1.21	3.91	3.91
3/4"	AP79PN	AP79PSN	3.34	3.34	4.22	5.55	1.47	1.47	5.41	5.41	1.21	1.21	3.91	3.91
1"	AP79PN	AP79PSN	3.34	3.34	4.22	5.55	1.47	1.47	5.41	5.41	1.21	1.21	3.91	3.91
1-1/2"	AP79PN	BP79PSN	3.34	4.40	4.22	5.86	1.47	1.73	5.41	5.66	1.21	1.41	3.91	5.32
2"	AP79PN	CP79PSN	3.34	5.00	4.22	7.64	1.47	1.97	5.41	5.89	1.21	1.85	3.91	5.56
3"	CP79PN	DP79PSN	5.00	6.49	7.00	11.49	1.97	2.56	5.89	6.48	1.85	2.36	5.56	6.90
4"	DP79PN	DP79PSN	6.49	6.49	9.21	11.49	2.56	2.56	6.48	6.48	2.36	2.36	6.90	6.90

NOTE; 1) THE SHAPE AND APPEARANCE OF ASSEMBLY DIFFER A LITTLE WITH NOMINAL SIZE COMPARED TO THIS DRAWING.

2) FOR DETAILED VALVE DIMENSIONS, REFER TO DWG. NO. 0126BV, 0127BV, 0128BV.
L-PORT : DWG. NO. 0126BV
DOUBLE L-PORT : DWG. NO. 0127BV
CROSS PORT : DWG. NO. 0128BV

FOR REFERENCE ONLY
ASAHI/AMERICA

	NAME	DATE
DR	KENICHI MIYAZAKI	4/8/03
APPD	KENNY BLYSTONE	4/8/03
PROD	LEO LESTER	4/8/03
WO#/CO#		
FILE		

ASAHI/AMERICA
ISO 9001 CERTIFIED
35 GREEN STREET, P.O. BOX 653, MALDEN, MA.

MULTI PORT BALL VALVE TYPE23 WITH ASI BUS SYSTEM 1/2" THRU 4"

SIZE	DWG. NO.	REV
A	0131BV	C

SCALE NTS

SHEET 1 OF 1

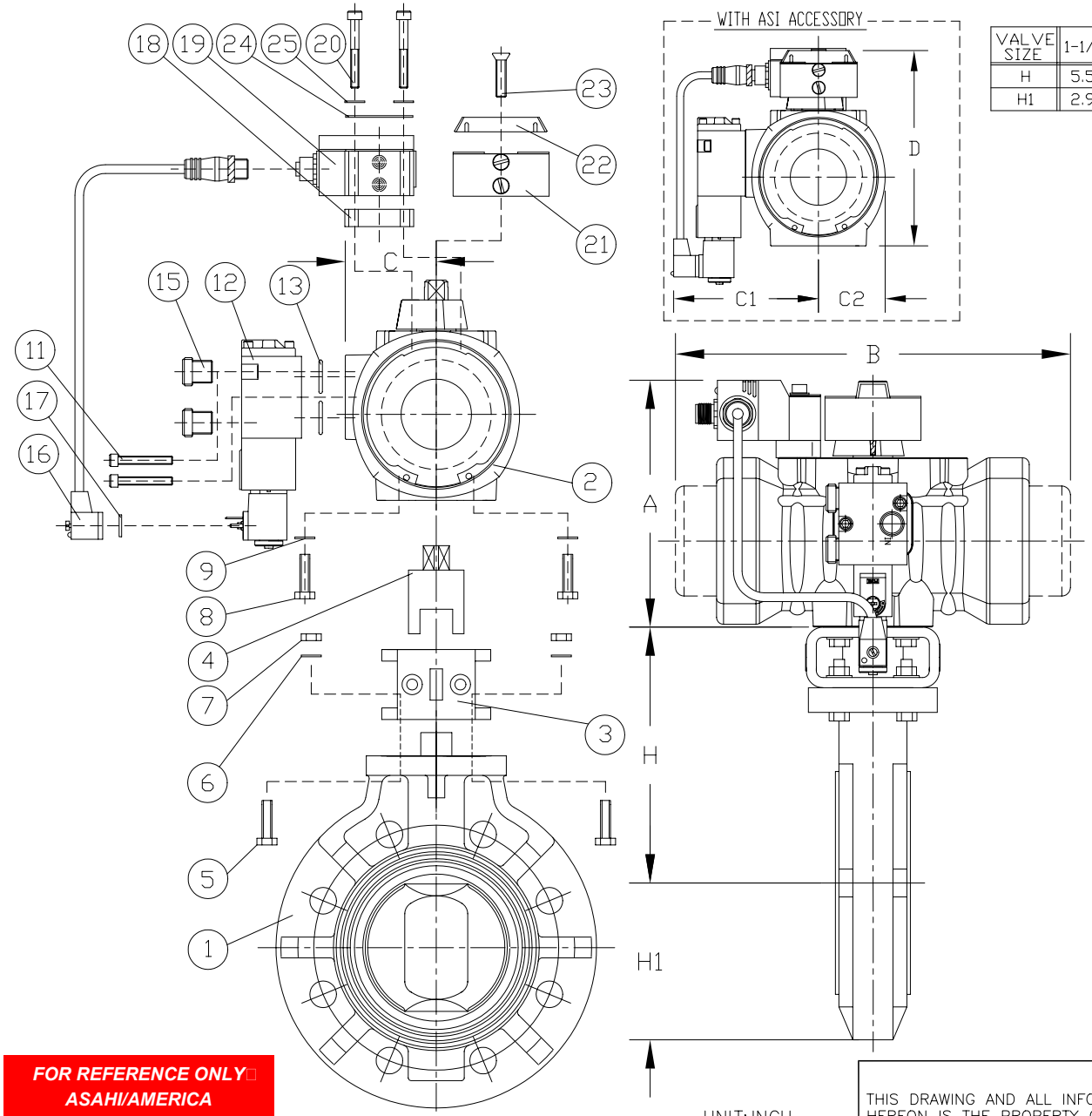

UNIT: INCH

VALVE SIZE	1-1/2"	2"	2-1/2"	3"	4"	5"	6"
H	5.51	5.75	6.18	6.46	7.16	8.46	8.97
H1	2.95	3.27	3.66	3.94	4.53	5.00	5.63

NOTE: 1.The shape and appearance of assembly differ a little with nominal size compared to this drawing.
2. For 1-1/2" thru. 4" Mounting Bracket : F7 x F05, F07
For 5" and 6" Mounting Bracket : F10 x F07, F10

ITEM	DESCRIPTION	MATERIAL	QTY
25	FLAT WASHER (M5)	316SS	2
24	SUPPORT PLATE	316SS	1
23	FLAT HEAD SCREW (M6X1-20LG)	316SS	1
22	POSITION INDICATOR	ABS	1
21	PUCK	DELRIN	1
20	ALLEN BOLT (M5X2-40LG)	316SS	2
19	MODULE	PBTP	1
18	SPACER	PBTP	1
17	GASKET	NBR	1
16	PATCH CABLE	PUR-PVC	1
15	MUFFLER	ANODIZED ALUMINUM	2
13	O-RING	NBR	2
12	SOLENOID (VERSA: SERIES C5 NAMUR)	ANODIZED ALUMINUM	1
11	SCREW SOC HD (M5X2-30LG)	STAINLESS STEEL	2
9	FLAT WASHER (FOR BP79 : M6.0) (FOR CP79 AND DP79 : M8.0) (FOR E79 : M10.0)	STAINLESS STEEL	4
8	BOLT (FOR BP79 : M6.0x1.00-16LG) (FOR CP79 AND DP79 : M8.0x1.25-16LG) (FOR E79 : M10.0x1.50-20LG)	STAINLESS STEEL	4
7	NUT (FOR 1-1/2" THRU. 4" : M8.0x1.25) (FOR 6" : M10.0x1.50)	STAINLESS STEEL	4
6	FLAT WASHER (FOR 1-1/2" THRU. 4" : M8.0) (FOR 6" : M10.0)	STAINLESS STEEL	8
5	BOLT (FOR 1-1/2" THRU. 4" : M8.0x1.25-35LG) (FOR 6" : M10.0x1.50-40LG)	STAINLESS STEEL	4
4	COUPLING	303SS	1
3	MOUNTING BRACKET	PPG	1
2	ACTUATOR SERIES 79	☐ GLASS FILLED POLYAMIDE ☐ STAINLESS STEEL (OPTION) ☐ RILSAN COATED CAST ALUMINUM (OPTION)	1
1	BUTTERFLY VALVE TYPE 56	PVC,PP,PVDF	1

FOR REFERENCE ONLY
ASAHI/AMERICA

UNIT: INCH

VALVE SIZE	MODEL A-A	MODEL A-S	A		B		C		C1		C2		D	
			A-A	A-S	A-A	A-S	A-A	A-S	A-A	A-S	A-A	A-S	A-A	A-S
1-1/2"	BP79PN	CP79PSN	5.38	5.62	4.92	8.74	1.73	1.73	3.78	4.22	1.41	1.85	5.32	5.56
2"	BP79PN	CP79PSN	5.38	5.62	4.92	8.74	1.73	1.73	3.78	4.22	1.41	1.85	5.32	5.56
2-1/2"	BP79PN	CP79PSN	5.38	5.62	4.92	8.74	1.73	1.73	3.78	4.22	1.41	1.85	5.32	5.56
3"	CP79PN	DP79PSN	5.62	6.96	7.00	11.50	1.96	1.96	4.22	4.69	1.85	2.36	5.56	6.90
4"	CP79PN	DP79PSN	5.62	6.96	7.00	11.50	1.96	1.96	4.22	4.69	1.85	2.36	5.56	6.90
5"	CP79PN	E79PSN	5.62	8.89	7.00	18.50	1.96	1.96	4.22	5.59	1.85	3.23	5.56	8.83
6"	DP79PN	E79PSN	6.96	8.89	9.21	18.50	2.55	2.55	4.69	5.59	2.36	3.23	6.90	8.83

NOTE: E79 AVAILABLE RILSAN COATED CAST ALUMINUM ONLY
FOR DETAILED VALVE DIMENSIONS, REFER TO DWG. NO. 0171BF OR 0172BF

	NAME	DATE
DR	KENICHI MIYAZAKI	4/8/03
APPD	KENNEY BLYSTONE	4/8/03
PROD	LEO LESTER	4/8/03
WO#/CO#		
FILE		

ASAHI/AMERICA
ISO 9001 CERTIFIED
35 GREEN STREET, P.O. BOX 653, MALDEN, MA.

BUTTERFLY VALVE TYPE56 SERIES79/ASI BUS SYSTEM 1-1/2" THRU 6"

SIZE	DWG. NO.	REV
A	0210BF	E

SCALE NTS

SHEET 1 OF 1

NOTE:
1. ILLUSTRATION SHOWS AN AIR-TO-SPRING MODEL. AIR-TO-AIR MODEL IS SIMILAR EXCEPT SPRINGS (ITEM 12) ARE OMITTED AND END CAPS (ITEM 2) ARE DIFFERENT.
2. ACTUATOR BODY (ITEM 1) AND END CAPS (ITEM 2) ARE GLASS FILLED POLYAMIDE FOR MODEL AP79P, BP79P, CP79P & DP79P (ALSO AVAILABLE IN STAINLESS STEEL). MODEL E79P, F79P & G79P ARE RILSAN (POLYAMIDE NYLON 11) COATED ALUMINUM.
3. ON A AND B SIZE ACTUATORS PINION (ITEM 5) AND SHAFT (ITEM 4) ARE ONE PART.

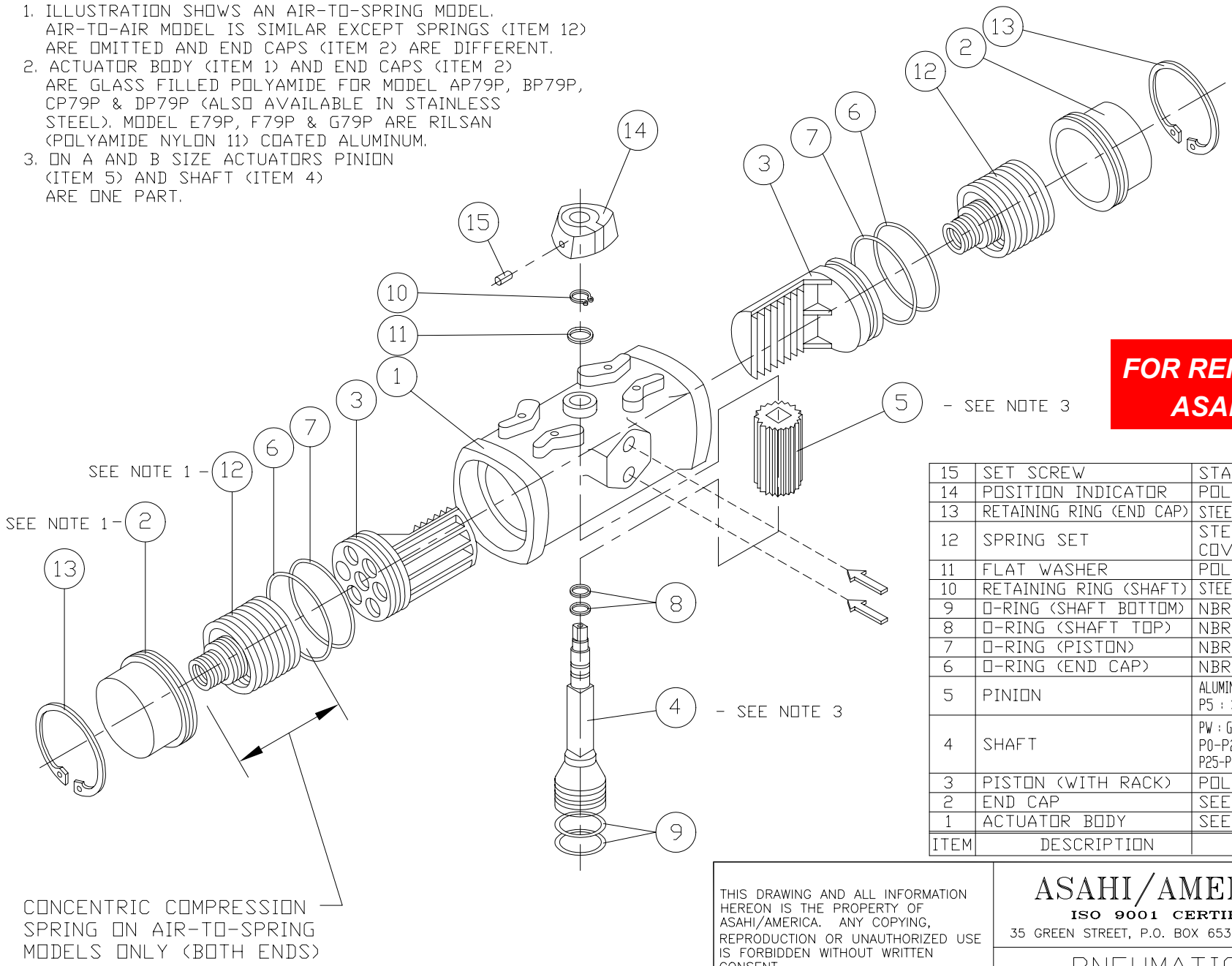

FOR REFERENCE ONLY
ASAHI/AMERICA

ITEM	DESCRIPTION	MATERIAL	QTY
15	SET SCREW	STAINLESS STEEL 303	1
14	POSITION INDICATOR	POLYAMIDE	1
13	RETAINING RING (END CAP)	STEEL COVERED BY CATAPHORESIS	2
12	SPRING SET	STEEL DIN 17-223-6 COVERED BY CATAPHORESIS	1
11	FLAT WASHER	POLYAMIDE 6	1
10	RETAINING RING (SHAFT)	STEEL COVERED BY CATAPHORESIS	1
9	O-RING (SHAFT BOTTOM)	NBR	2
8	O-RING (SHAFT TOP)	NBR	2
7	O-RING (PISTON)	NBR	2
6	O-RING (END CAP)	NBR	2
5	PINION	ALUMINUM ALLOY COVERED BY CATAPHORESIS P5 : STEEL COVERED BY CATAPHORESIS	1
4	SHAFT	PW : GLASS FILLED POLYAMIDE WITH INOX NSERT P0-P2 : INOX STAINLESS STEEL 303 P25-P5 : COVERED STEEL BY CATAPHORESIS	1
3	PISTON (WITH RACK)	POLYAMIDE	2
2	END CAP	SEE NOTE 2	2
1	ACTUATOR BODY	SEE NOTE 2	1

	NAME	DATE
DR	KENICHI MIYAZAKI	9/4/01
APPD	DAVE HURLEY	9/4/01
PROD	LEO LESTER	9/4/01
WO#/CO#		
FILE		

ASAHI/AMERICA
ISO 9001 CERTIFIED
35 GREEN STREET, P.O. BOX 653, MALDEN, MA.

PNEUMATIC ACTUATOR SERIES 79P EXPLODED VIEW

SIZE	DWG. NO.	REV
A	1233	A

SCALE NTS

SHEET 1 OF 1